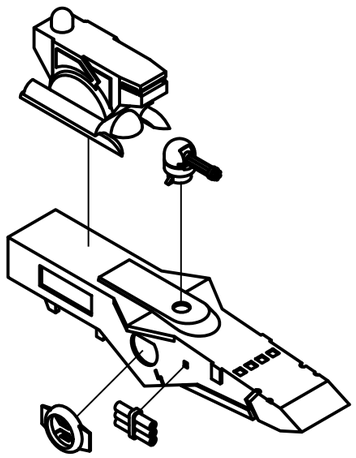

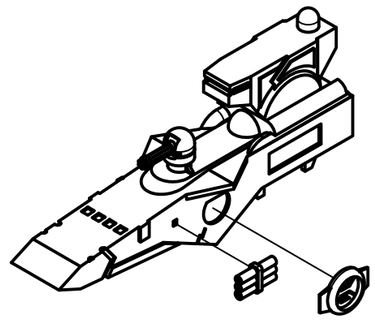

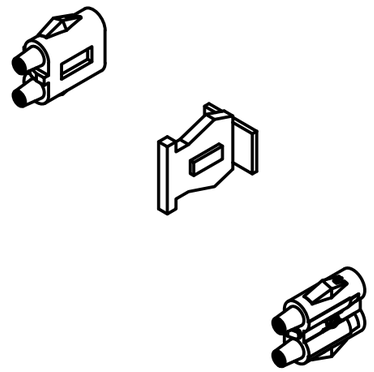

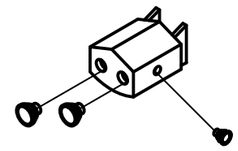

4X
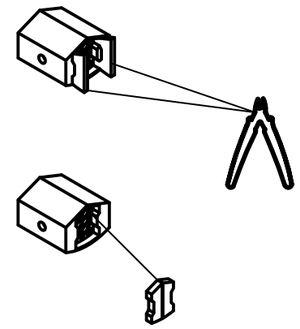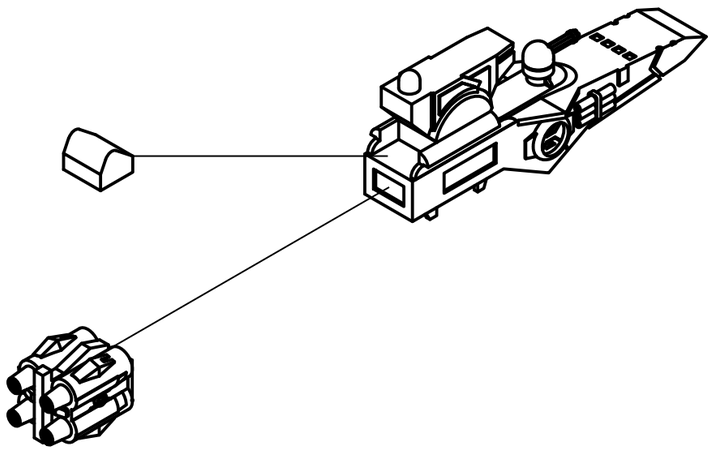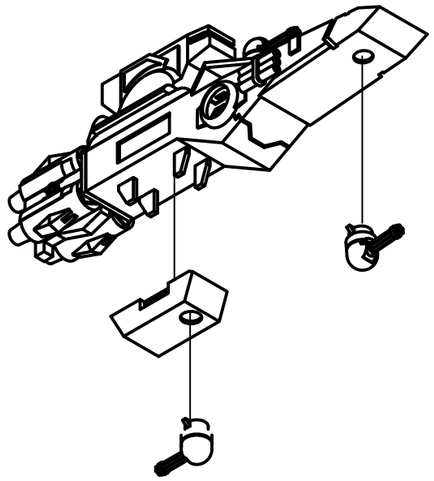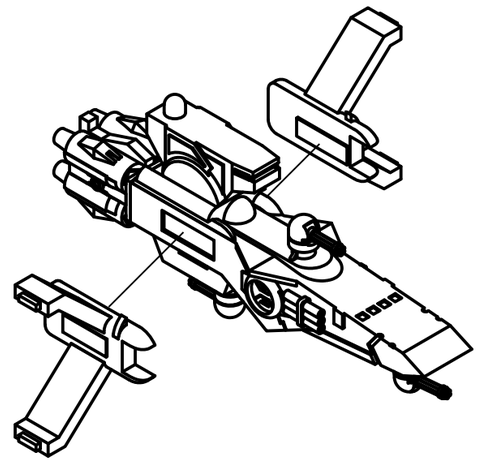
Closed missle bay